ADLINK
LEADING EDGE AI COMPUTING

cExpress-ASL/ALN

COM Express COM.0 R3.1 Type 6
Compact Size Module based on Intel®
Amston Lake / Alder Lake-N Platform

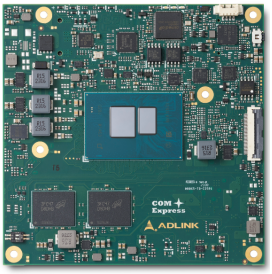

Features

- Max. 8 Gracemont cores, boosting up to 3.8GHz
- 12th Gen Intel UHD graphics, max. 3x 4K60
- Up to 16GB LPDDR5 max. 4800MT/s, in-band ECC
- On-board memory for extreme rugged application
- Real-time based on 2.5G Ethernet, Intel TSN/TCC
- Up to 8x PCIe Gen3 lanes and 4x USB 3.2 ports
- 1x USB-C and MIPI-CSI 4-lane

Specifications

Core System	SoC	**7th Gen Intel® Atom® x7425E, x7211E processors (formerly Alder Lake-N)**

Processor	Cores	Cache	TDP	Graphics
Atom x7425E	4-core	6MB	12W	UHD 24EUs
Atom x7213E	2-core	6MB	10W	UHD 16EUs
Atom x7211E	2-core	6MB	6W	UHD 16EUs
Processor N97	4-core	6MB	12W	UHD 24EUs
Processor N50	2-core	6MB	6W	UHD 16EUs
7th Gen Intel® Atom® x7000RE & x7000C processors (formerly Amston Lake)				
Atom x7211RE	2-core	6MB	6W	UHD 16EUs
Atom x7213RE	2-core	6MB	9W	UHD 16EUs
Atom x7433RE	4-core	6MB	9W	UHD 32EUs
Atom x7835RE	8-core	6MB	12W	UHD 32EUs
Atom x7809C	8-core	6MB	25W	no GPU
Atom x7405C	4-core	6MB	12W	no GPU
Atom x7203C	2-core	6MB	9W	no GPU

Supporting Intel® VT (including VT-x, VT-d, VT-x with Extended Page Tables), Intel® SSE4.2, Intel® 64 Architecture, Intel® AVX2, Intel® OS Guard, Intel® Boot Guard, Mode-based Execute Control, Intel® AES-NI
Note: Availability of features may vary between processor SKUs. Atom SKU is capable of Intel IBECC and TCC/TSN feature (specific hardware and software configuration may be required). Please contact an ADLINK representative for details.

Memory	16/8/4GB LPDDR5 memory, max. 4800MT/s, IBECC (build option)
Embedded BIOS	AMI Aptio V
Cache	See above
Expansion Buses	8 PCIe x1 Gen3 lanes (PCIe lane 5-7 are build option, see block diagram below)
SEMA Board Controller	Supports: Voltage/current monitoring, power sequence debug support, AT/ATX mode control, logistics and forensic information, genral purpose I^2C, UART, GPIO, watchdog timer, fan control
Debug Headers	30-pin multipurpose flat cable connector for use with DB30-x86 debug module providing BIOS POST code LED, SEMA Board Controller access, SPI BIOS flashing, power testpoints, debug LEDs
Management Bus	I2C, SMBus

Note: "Build option""indicates an alternative BOM configuration to support additional or alternative functions that are not available on the standard product. Be aware that these "build option" part numbers will need to be newly created and this will result in production lead times.

Specifications

Video	GPU Feature Support	12th Gen Intel® UHD Graphics with up to 32 execution units, supporting 3 independent, simultaneous DirextX 12, OpenCL 3.0, Vulkan 1.2, SR-IOV
	Digital Display Interface	2x DDI (DP 1.4/HDMI 2.0b)
	VGA	DP-to-VGA (build option, in place of DDI2)
	LVDS	eDP-to-LVDS, single/dual-channel, 18/24-bit
	eDP	4 lane support (build option, in place of LVDS)
	USB-C	DP Alt mode (build option, in place of DDI1)
Audio	Chipset	Integrated on SoC
	Codec	On carrier Express-BASE6 (ALC886 standard support)
Ethernet	Intel® MAC/PHY	Intel® Ethernet Connection I226 series (TSN by build option)
	Interface	2.5GbE and 1000/100/10 Mbit/s Ethernet connection
Multi I/O and Storage	USB	4x USB 3.2 Gen2 (default 2 ports, can use hub for 4 ports, build option) 2x SATA 6Gb/s (SATA 0-1 muxed with PCIe lane 6/5, SATA as default)
	USB-C	USB and DP Alt mode (in place of DDI1, build option)
	eMMC	eMMC 5.1, 3.2GB to 128GB (build option)
Super I/O	Supported on carrier if needed (standard support W83627DHG-P, other Super I/O supported by project basis)	
TPM	Chipset	Infineon
	Type	TPM 2.0 (SPI based)
Power	Standard Input	ATX: 8.5-20V+/-5% / 5Vsb+/-5% ; or AT: 8.5-20V+/-5%
	Management	ACPI 5.0 compliant, Smart Battery support (TBC)
	Power States	C1-C6, S0, S3, S4, S5, S5 ECO mode (Wake-on-USB S3/S4, WoL S3/S4/S5)
	ECO Mode	Supports deep S5 mode for power saving
Mechanical and Environmental	Form Factor	PICMG COM.0: Rev 3.1 Type 6
	Dimension	Compact size: 95 mm x 95 mm
	Operating Temperature	Standard: 0°C to 60°C Extreme Rugged: -40°C to 85°C (Amston Lake, standard 12V input)
	Humidity	5-90% RH operating, non-condensing 5-95% RH storage (and operating with conformal coating)
	Shock and Vibration	IEC 60068-2-64 and IEC-60068-2-27 MIL-STD-202F, Method 213B, Table 213-I, Condition A and Method 214A, Table 214-I, Condition D (TBC)
	HALT	Thermal Stress, Vibration Stress, Thermal Shock and Combined Test
Operating Systems	Standard Support	Windows 10 64-bit IoT Enterprise LTSC 2021, Ubuntu 20.04.4 LTSC, Yocto (LTS-Kernel 2021, TBC), Windows 11 64-bit IoT Enterprise LTSC (24H2)

Note: "Build option""indicates an alternative BOM configuration to support additional or alternative functions that are not available on the standard product. Be aware that these "build option" part numbers will need to be newly created and this will result in production lead times.

Ordering Information

Module	
cExpress-ALN-x7425E-16G	Compact size COM Express Type 6 with Intel Alder Lake-N Atom x7425E(4C), 16GB LPDDR5
cExpress-ALN-x7213E-4G	Compact size COM Express Type 6 with Intel Alder Lake-N Atom x7213E(2C), 4GB LPDDR5
cExpress-ALN-x7211E-8G	Compact size COM Express Type 6 with Intel Alder Lake-N Atom x7211E(4C), 8GB LPDDR5
cExpress-ASL -x7211RE-8G	Compact size COM Express Type 6 with Intel Amston Lake x7211RE Processor(2C), 8GB LPDDR5
cExpress-ASL -x7213RE-4G	Compact size COM Express Type 6 with Intel Amston Lake x7213RE Processor(2C), 4GB LPDDR5
cExpress-ASL-x7433RE-8G	Compact size COM Express Type 6 with Intel Amston Lake x7433RE Processor(4C), 8GB LPDDR5
cExpress-ASL-x7835RE-16G	Compact size COM Express Type 6 with Intel Amston Lake x7835RE Processor(8C), 16GB LPDDR5
t1cExpress-ASL-x7835RE-16G	Compact COM Express Type6 with Intel Amston Lake Atom x7835RE, 16GB LPDDR5, -40°C to 85°C
t1cExpress-ASL-x7433RE-8G	Compact COM Express Type6 with Intel Amston Lake Atom x7433RE, 8GB LPDDR5, -40°C to 85°C
t1cExpress-ASL-x7211RE-4G	Compact COM Express Type6 with Intel Amston Lake Atom x7211RE, 4GB LPDDR5, -40°C to 85°C

Note: For certain processor or memory capacity SKUs not listed, please contact our ADLINK representative.

Accessories

Heat Spreaders	
HTS-cALN-B	Heatspreader for cExpress-ALN with threaded standoffs for bottom mounting
HTS-cALN-BT	Heatspreader for cExpress-ALN with through-hole standoffs for top mounting
Passive Heatsinks	
THS-cALN-B	Low-profile Heatsink for cExpress-ALN with threaded standoffs for bottom mounting
THS-cALN-BT	Low-profile Heatsink for cExpress-ALN with through-hole standoffs for top mounting
THSH-cALN-B	High-profile Heatsink for cExpress-ALN with threaded standoffs for bottom mounting
Active Heatsinks	
THSF-cALN-B	High-profile Heatsink with Fan for cExpress-ALN with threaded standoffs for bottom mounting

Note: "Build option" indicates an alternative BOM configuration to support additional or alternative functions that are not available on the standard product.
Be aware that these "build option" part numbers will need to be newly created and this will result in production lead times.

Block diagram

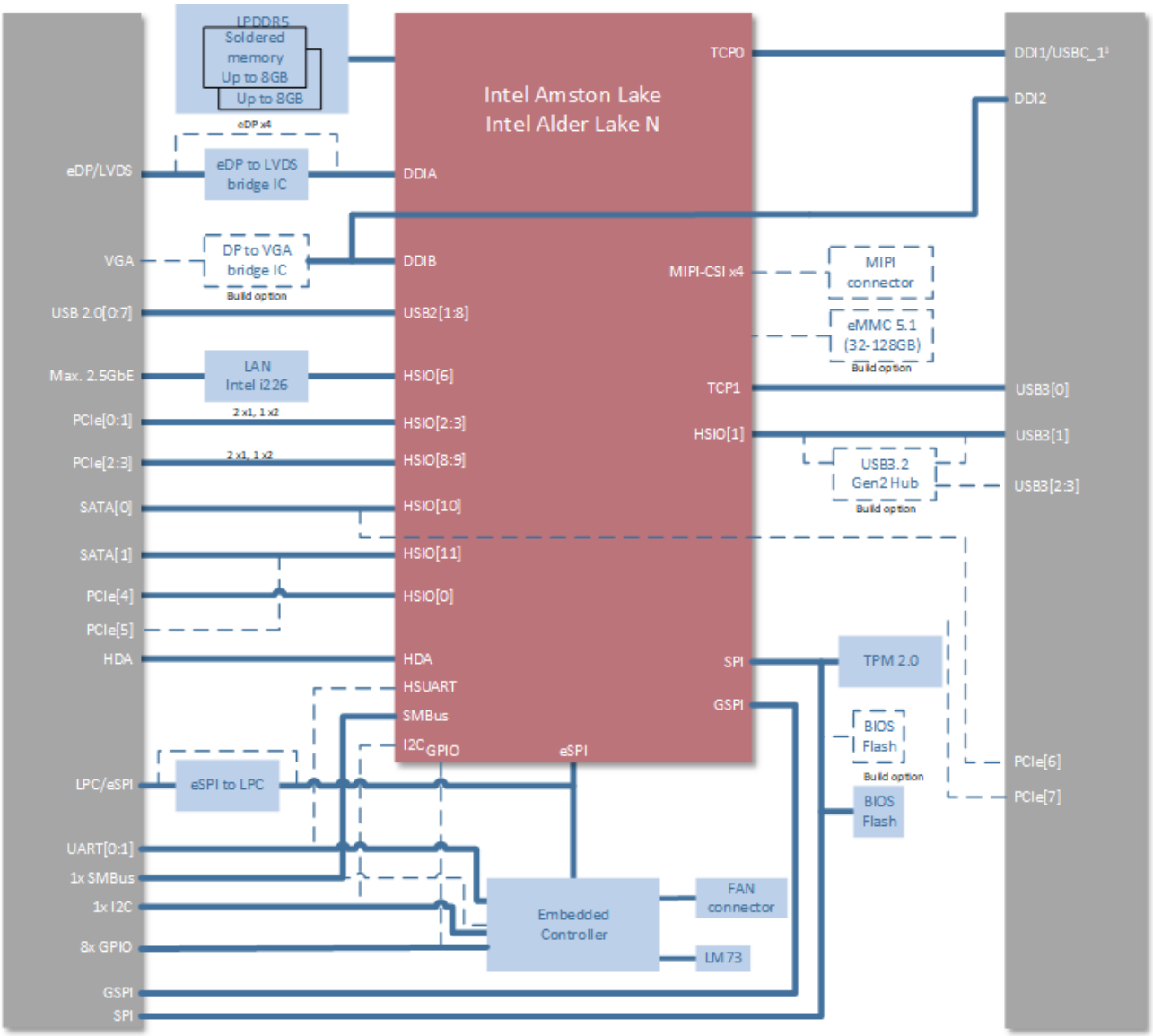

Note: OEM BIOS can support USB-C via DDI1 port.

Note: "Build option" indicates an alternative BOM configuration to support additional or alternative functions that are not available on the standard product. Be aware that these "build option" part numbers will need to be newly created and this will result in production lead times.

All products and company names listed are trademarks or trade names of their respective companies. Updated October 02, 2026. ©2026 ADLINK Technology, Inc. All Rights Reserved. All pricing and specifications are subject to change without further notice.